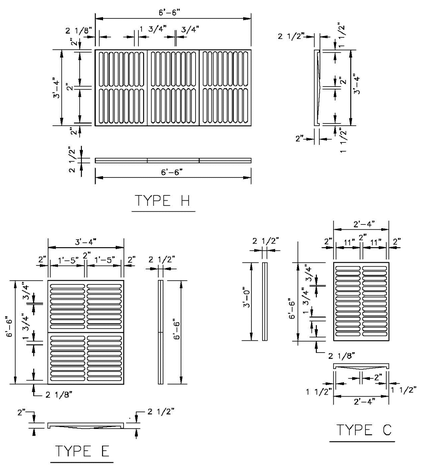

CAST IRON GRATES

ENGINEERING STANDARDS 2025

REVISIONS BY	DATE	ENGINEERING DIVISION CITY OF POMPANO BEACH	CAST IRON GRATES	DATE: JUNE 2022 DWG. NO. 410-1
		SCALE: N.T.S.		

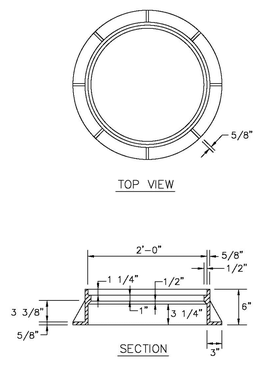

CAST IRON FRAME FOR MANHOLES

ENGINEERING STANDARDS 2025

REVISIONS BY	DATE	ENGINEERING DIVISION CITY OF POMPANO BEACH	CAST IRON FRAME FOR MANHOLES	DATE: JUNE 2022 DWG. NO. 411-1
		SCALE: N.T.S.		

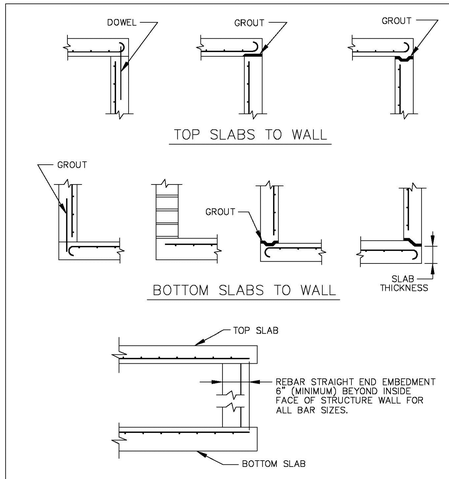

OPTIONAL CONSTRUCTION JOINTS

ENGINEERING STANDARDS 2025

REVISIONS BY	DATE	ENGINEERING DIVISION CITY OF POMPANO BEACH	OPTIONAL CONSTRUCTIONAL JOINTS	DATE: JUNE 2022 DWG. NO. 412-1
		SCALE: N.T.S.		

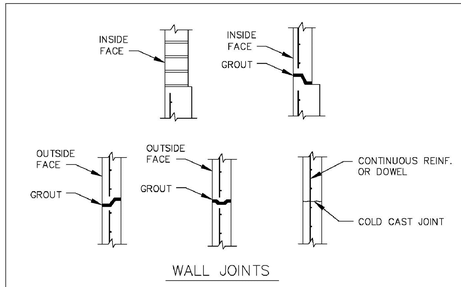

NOTES:

1. ONE OR MORE TYPES OF JOINTS MAY BE USED IN A SINGLE STRUCTURE, EXCEPT BRICK WALL STRUCTURE. BRICK WALL CONSTRUCTION IS PERMITTED ON CIRCULAR UNITS ONLY.
2. ALL GROUTED JOINTS ARE TO HAVE A MAXIMUM THICKNESS OF 1".
3. KEYWAYS ARE TO BE A MINIMUM OF 1 1/2" DEEP.
4. JOINT DOWELS ARE TO BE #4 BARS, 12" LONG WITH A MINIMUM OF 6 BARS PER CIRCULAR STRUCTURES APPROXIMATELY EVENLY SPACED, AND 2 BARS PER SIDE AT APPROXIMATE QUARTER POINTS FOR RECTANGULAR STRUCTURES.
5. MINIMUM COVER ON REINFORCING BARS IS 1 1/4".
6. REBAR STRAIGHT END EMBANKMENT MAY BE USED IN LIEU OF ACI STANDARD HOOKS FOR TOP AND BOTTOM SLABS EXCEPT WHEN HOOKS ARE SPECIFICALLY CALLED FOR IN PLANS OR STANDARD DRAWINGS.
7. JOINTS BETWEEN WALL SEGMENTS AND BETWEEN WALL SEGMENTS AND TOP OR BOTTOM SLABS MAY BE SEALED EITHER BY PREFORMED PLASTIC GASKET MATERIAL OR BY GROUT.
8. APPROVED PRODUCT INSERTS MAY BE USED IN LIEU OF DOWEL EMBEDMENT.

OPTIONAL CONSTRUCTION JOINTS

ENGINEERING STANDARDS 2025

REVISIONS BY	DATE	ENGINEERING DIVISION CITY OF POMPANO BEACH	OPTIONAL CONSTRUCTION JOINT	DATE: JUNE 2022 DWG. NO. 412-2
		SCALE: N.T.S.		

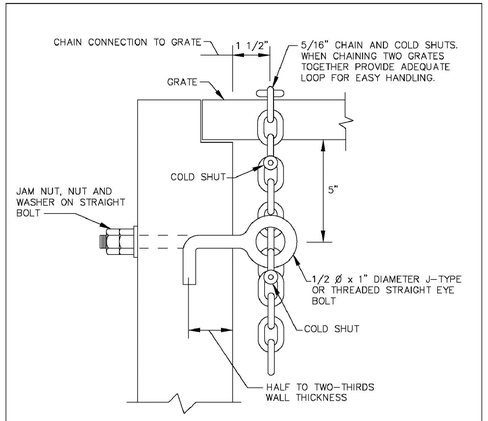

NOTE: WHEN ALTERNATE "G" GRATE IS SPECIFIED, THE CHAIN, BOLT, NUTS, WASHER AND COLD SHUTS SHALL BE GALVANIZED IN ACCORDANCE WITH THE SPECIFICATIONS FOR THE GRATE.

COST OF EYE BOLT AND CHAIN TO BE INCLUDED IN THE CONTRACT UNIT PRICE FOR INLETS.

EYE BOLT AND CHAIN FOR LOCKING GRATES

ENGINEERING STANDARDS 2025

REVISIONS BY	DATE	ENGINEERING DIVISION CITY OF POMPANO BEACH	EYE BOLT AND CHAIN	DATE: JUNE 2022 DWG. NO. 413-1
		SCALE: N.T.S.		

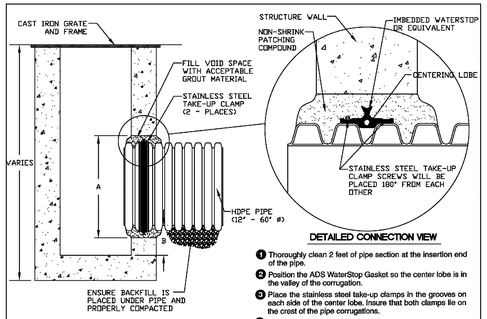

INSTALLATION RECOMMENDATIONS

PIPE SIZE	PIPE OD (IN)		"A" MIN. "B" MIN. DISTANCE PIPE INVERT
(IN)	(+-PROFILE)	(+-PROFILE)	HOLE # TO STRUCTURE INVERT (IN)
			(IN)
12	14.5	14.2	15.50 3.7
15	17.6	17.8	23.00 4.0
18	21.2	21.5	26.50 4.2
24	27.8	28.4	33.25 4.5
30	35.1	35.5	40.50 5.2
36	41.1	41.4	47.00 5.5
42	47.7	48.5	53.60 5.7
48	53.6	54.2	59.60 5.7
60	66.3	67.3	72.60 6.4

1. Thoroughly clean 2 feet of pipe section at the insertion end of the pipe.
2. Position the ADS WaterStop Gasket so the center lobe is in the valley of the corrugation.
3. Place the stainless steel take-up clamps in the grooves on each side of the center lobe. Insure that both clamps lie on the crest of the pipe corrugations.
4. Position the take-up clamp screws 180° from each other. Using a torque ratchet or torque wrench, gradually tighten both screws of each clamp to 60 lbs./inch torque. Do not overtighten. A screw driver will not tighten clamps adequately.
5. Apply a good quality concrete bonding agent to the structure opening.
6. Insert pipe into the structure opening. Make sure that the ADS WaterStop is fully within the plane of the structure's wall. **If mortaring in place,** apply and compact non-shrink grout around the ADS WaterStop and between the pipe and the opening, taking care to fill the voids. Make sure that the ADS WaterStop Gasket does not contact the bare structure walls. **If pouring in place,** use concrete of sufficient slump to permit complete flow around the pipe and ADS WaterStop. Thoroughly vibrate all around the pipe and ADS WaterStop Gasket to complete compaction and to release any trapped air.
7. Allow concrete or mortar to fully cure before testing or backfilling. If the system is to be tested, testing should be completed prior to backfilling around the structure, following all recommendations and requirements of the test system manufacturer. Plug any vent holes in the N-12 pipe prior to testing.
8. Backfill the N-12 pipe following recommendations in ADS Product Note 3.115, *Installing N-12 Storm, Sanitary Sewer and Culvert Pipe.*

WATER STOP SEAL

ENGINEERING STANDARDS 2025

REVISIONS BY	DATE	ENGINEERING DIVISION CITY OF POMPANO BEACH	WATER STOP SEAL	DATE: MAY 2022 DWG. NO. 414-1
TCW	04-08	SCALE: N.T.S.		

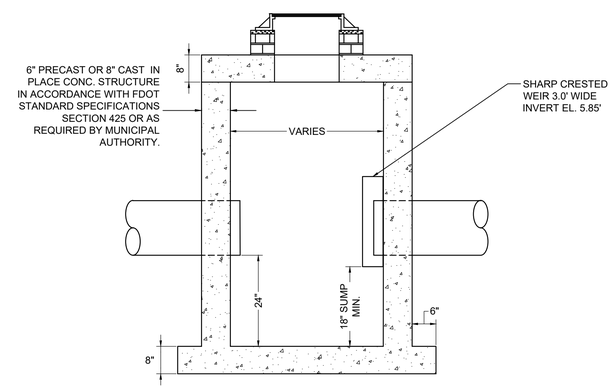

NOTES:

1. STRUCTURE MANUFACTURER AND/OR CONTRACTOR SHALL CONFIRM ALL STEEL REINFORCEMENT MEETS FDOT STANDARDS PER INDEX 425-010, SECTION 415 AND 425 PRIOR TO SUBMITTING ANY SHOP DRAWINGS FOR APPROVAL.
2. LOCKING GRATES TO BE PROVIDED.

CONTROL STRUCTURE DETAIL

10

NOT TO SCALE

KEITH
301 East Atlantic Blvd.
Pompano Beach, FL 33060
PH: (954) 788-3400
Florida Engineering Business License: CA7928
Florida Surveyor and Mapper Business License: LB6860
Florida Landscape Architecture Business License: LC26000457

REVISIONS

NO.	DESCRIPTION	DATE

PRELIMINARY PLAN NOT FOR CONSTRUCTION

THESE PLANS ARE NOT FULLY PERMITTED AND ARE SUBJECT TO REVISIONS MADE DURING THE PERMITTING PROCESS.

RESPONSIBILITY FOR THE USE OF THESE PLANS PRIOR TO OBTAINING PERMITS FROM ALL AGENCIES HAVING JURISDICTION OVER THE PROJECT WILL FALL SOLELY UPON THE USER.

ISSUE DATE:	03/11/2026
DESIGNED BY:	CA
DRAWN BY:	BN
CHECKED BY:	CA
BID-CONTRACT:	

This item has been digitally signed and sealed by CHRISTOPHER T. ANDREONI, P.E. on the date adjacent to the seal. Signature must be verified on any electronic copies.

CHRISTOPHER T. ANDREONI LICENSE No. 84184 STATE OF FLORIDA PROFESSIONAL ENGINEER

2026.07.06 14:59:36-04'00'

CHRISTOPHER T. ANDREONI, P.E.
FLORIDA REG. NO. 84184
(FOR THE FIRM)

CLIENT

RP POMPANO LLC

PROJECT

POMPANO BEACH CITY HALL & PARKING DECK

SHEET TITLE

PAVING, GRADING, AND DRAINAGE DETAILS

SHEET NUMBER	CP-504
PROJECT NUMBER	15083.00

STATUS: PRELIMINARY

Plotted by: dellas On 7/1/2026 6:05 PM

Drawing name: H:\15083.00 - Downtown Pompano - RP Development LLC\Engineering\Cad\Phase I (Infrastructure)\15083.00-CP-SXX-PH1.dwg

DRC
PZ26-12000001
08/05/2026